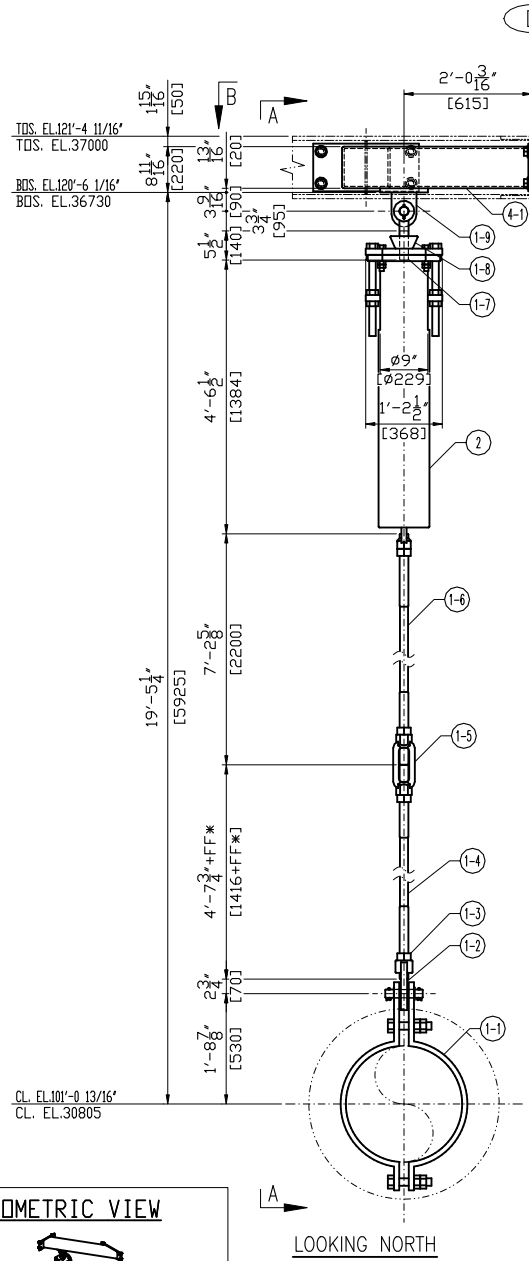

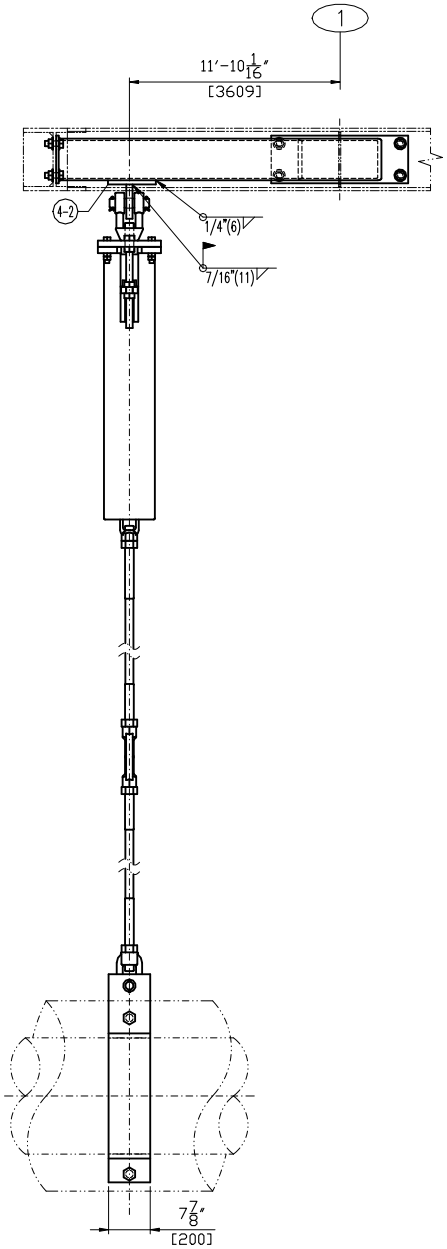

ISOMETRIC VIEW

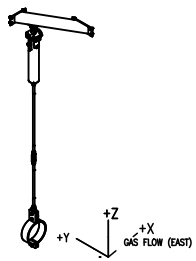

Revision History

Rev	Description	Date	Drawn / Checked By Approved By
–	INITIAL ISSUE	2026-01-21	Drawn J.B.HONG Checked By T.H.KIM Approved By B.L.CHOI

BILL OF MATERIAL — TOTAL WEIGHT : 1078.2 LB — SELECTION NO. 1503 — AREA RIGHT

ITEM	DESCRIPTION	TYPE OR SIZE	LENGTH(mm)	LENGTH(IN)	QTY.	MATERIAL	WEIGHT(LB)/UNIT	WEIGHT(LB)/TOTAL	REMARK
1-1	PIPE CLAMP	PCHDC-550-H			1	A36		213.63	NOTE #2
1-2	EYE NUT	EN-M42			1	A668-C		10.58	NOTE #2
1-3	HEX. NUT	HN-M42			4	A563-A	1.32	5.28	NOTE #2
1-4	TIE ROD	TRR-M42	1470	61.02	1	A36		30.14	NOTE #2
1-5	ROD COUPLING	RC-M42			1	A668-C		9.92	NOTE #2
1-6	TIE ROD	TRR-M42	2200	86.61	1	A36		45.11	NOTE #2
1-7	THREADED STUD	THS-M42	140	5.51	1	A36		2.87	NOTE #2
1-8	CLEVIS WITH PIN	CP-M42			1	A668-C		19.62	NOTE #2
1-9	WELD ON EYE PLATE	WP-M42			1	A36		8.16	NOTE #2
2	VAR. SPRING HANGER	VHTA-17-M42			1	-		432.11	NOTE #2
3	H.S.B/N/2PW	1"-8 UNC-2 3/4"			8	A325	1.54	12.32	NOTE #3
4-1	SQUARE TUBE(1-16)	ST200x200x9	1792	70.55	1	A500 Gr.B		206.62	NOTE #3
4-2	PLATE	PL20x230x230			1	A36		18.31	NOTE #3
4-3	PLATE(4-127-SLOT33)	PL12x229x508			1	A36		24.16	NOTE #3

PIPING INFORMATION

PIPE SIZE (IN): 22 — PIPE MATERIAL: A335-P11 — OPER. TEMP (F) : 744 — INSULATION (IN): 7

SUPPORT NUMBER	ISO NO.: 1503 SUPPORT COORDINATES X	Y	Z	DESIGN LOADS (KIPS) X	Y	Z	DESIGN MOVEMENTS (IN) X	Y	Z
1503-PS06	61'-5 13/16'	-7'-7 7/16'	101'-0 13/16'	±0	±0	-12.16	-0.28	-0.43	0.46
	18740	-2323	30805						

"Z" UP, "Y" NORTH, "X" EAST, GAS FLOW

HANGER SETTING DATA(EACH)			
SPRING LOAD	9.428 KIPS	TOTAL TRAVEL	9.45 IN
HOT LOAD	9.435 KIPS	THERMAL MOVEMENT	0.46 IN
COLD LOAD	9.743 KIPS	SPRING RATE	668.7 LB/IN
		VARIABILITY	3 %

UNIT NO.: 11

NOTES:

1. PIPE SUPPORT SHOP ATTACHMENTS, GENERAL NOTES, WELD & PLATE DETAILS 1635572-D1S0-3800
2. THIS ITEM WILL BE SUPPLIED BY ENGINEERED PIPE SUPPORT SUPPLIER.
3. THIS ITEM WILL BE SUPPLIED BY STEEL SUPPORT FABRICATOR.
4. PIPE ATTACHMENTS THAT ARE SHOP WELDED ONTO THE PIPE ARE SUPPLIED BY THE PIPE FABRICATOR.
5. BILL OF MATERIAL SHOWN ARE FOR ONE (1) SUPPORT, THERE IS ONE (1) SUPPORT PER UNIT
6. REFER TO DRAWING 1635572-D2S0-3801~3804 FOR TYPICAL SHOP WELDED CONNECTION DETAILS NOT SPECIFIED ON THIS DRAWING.
7. FF* : 1 15/16(50)mm FIELD ADJUST
8. THIS ITEM WILL BE SUPPLIED BY CUSTOMER.

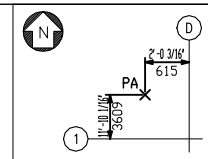

KEY PLAN

Similar To:	Created By:		MLI No.
NONE	SEONGHWA		NONE
First Made For: 1635572	Checked By: VIMAL.V	Approved By: Kim, Chunrae	IEC61355 No. MTC
	Document Type: DETAIL DRAWING		Sheet Size A2
	Document Title: PIPE SUPPORT FOR CRH STEAM		
Creation Date 2026-01-21	Drawing No. 1635572-1503-PS06	Revision –	Sheet 1 OF 2

THIRD ANGLE PROJECTION

GE VERNOVA

NLR
Copyright© GE Vernova and/or its affiliates 2026
All rights reserved. The information herein is proprietary information of GE Vernova and/or its affiliates. Thus, it is being provided with the explicit expectation of restricted use. All persons or legal entities receiving this information shall be deemed by the act of its receipt to have contractually agreed to make no duplications, reproductions of any nature by any means, modifications, disclosures, or use use any portion of this material; except as is expressly authorized in writing by GE Vernova and/or its affiliates.

ITEM	DESCRIPTION	TYPE OR SIZE	LENGTH(mm)	LENGTH(IN)	QTY.	MATERIAL	WEIGHT(LB)/UNIT	WEIGHT(LB)/TOTAL	REMARK
4-4	PLATE(4-I27-SLOT33)	PL12x229x658			1	A36		31.29	NOTE #3

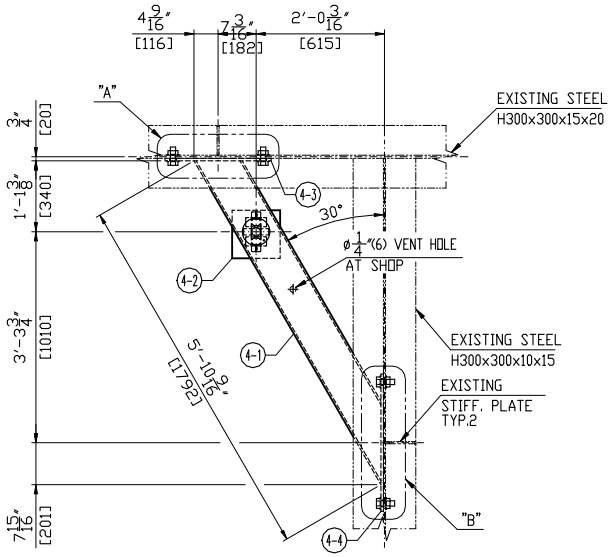

SECTION B-B
(PLAN VIEW N)

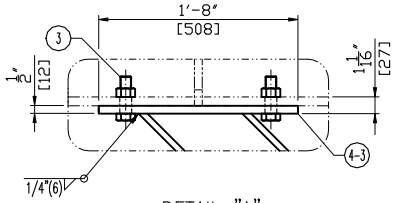

DETAIL "A"

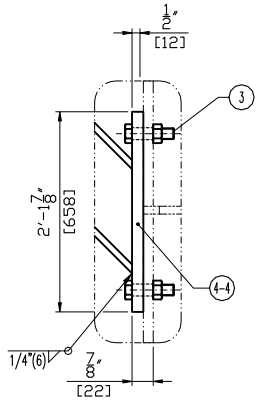

DETAIL "B"

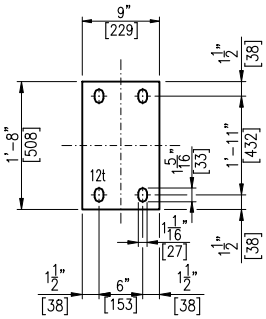

ITEM 4-3

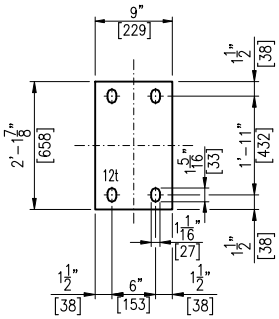

ITEM 4-4

NLR

Copyright© GE Vernova and/or its affiliates 2026
All rights reserved. The information herein is proprietary information of GE Vernova and/or its affiliates.

GE VERNOVA	Document Type: DETAIL DRAWING		Sheet Size A2
	Document Title: PIPE SUPPORT FOR CRH STEAM		
Creation Date 2026-01-21	Drawing No. 1635572-1503-PS06	Revision –	Sheet 2 OF 2